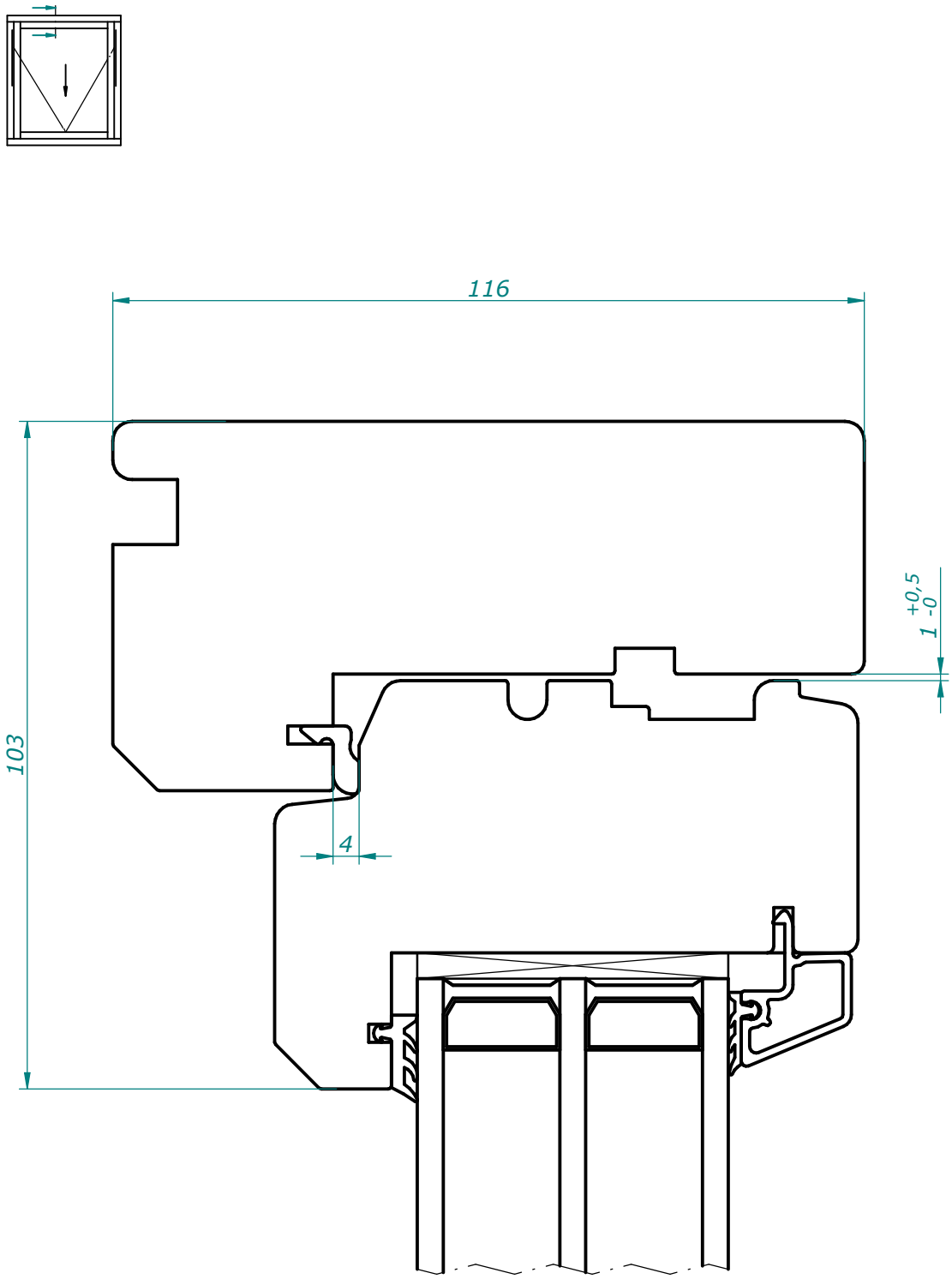


| | | | | | |
|---|---|---|---|---|---|
| Date 17.04.15 | Design/Tracer TES | Approved | Scale 1:1 | | Ref. no. S102 |
| The H-window<br>Top Hung fully reversible<br>Vertical section, top | | | Material | AS SPILKA INDUSTRI<br>Emblem, N-6013 Ålesund, Norway | |
| | | | Replacement for: | Drawing no. 4-49-73 | Rev. |
| Tolerance.: NS-ISO 2768-1-medium | | | Replaced by: | | |